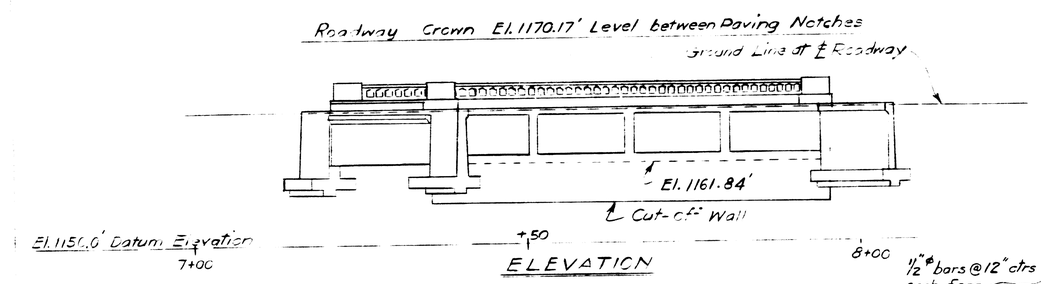

ELEVATION

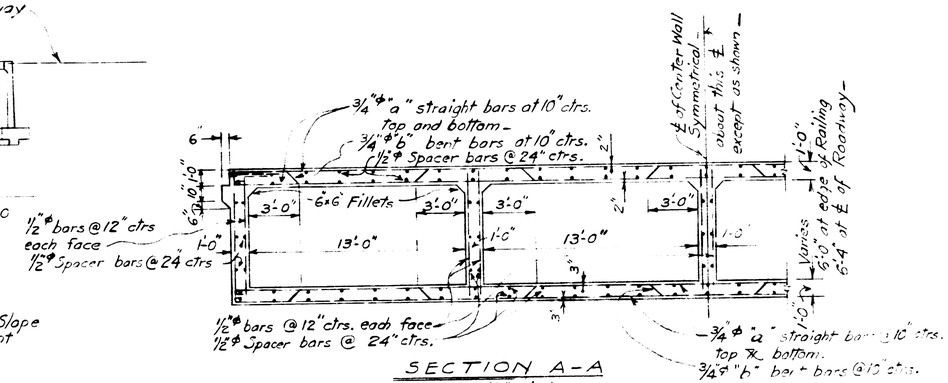

SECTION A-A
Scale, 1/4"=1'-0"

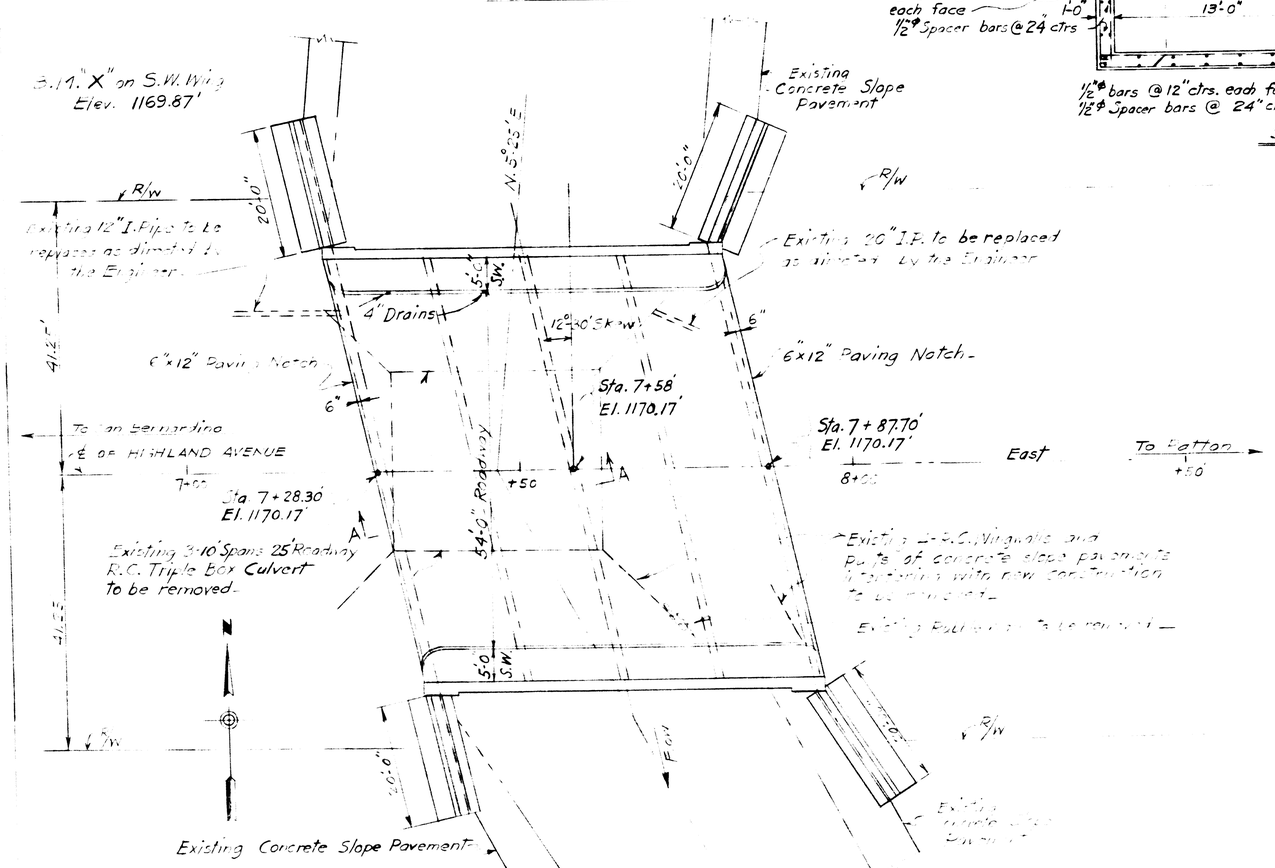

PLAN
Scale:— 1" = 10'

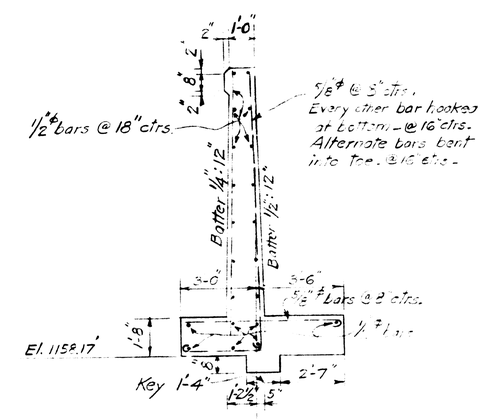

SECTION ON WING-WALL
Scale:— 3/8"=1'-0"

PLAN
OF
CULVERT ACROSS EAST TWIN CREEK
ON HIGHLAND AVENUE IN SAN BERNARDINO
IN SAN BERNARDINO COUNTY

APRIL-1937

CHARLES L. F[illegible]KE
CITY EN[illegible]EER.

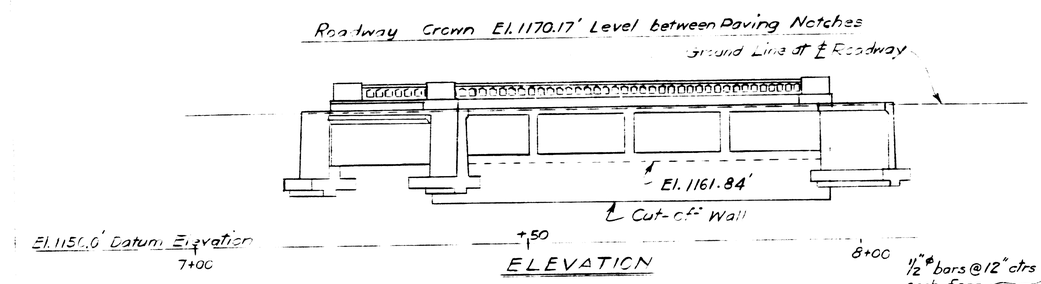

ELEVATION

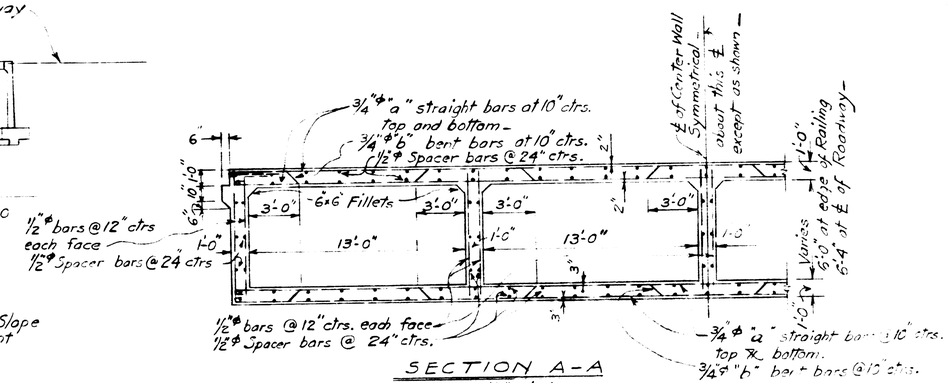

SECTION A-A
Scale, 1/4"=1'-0"

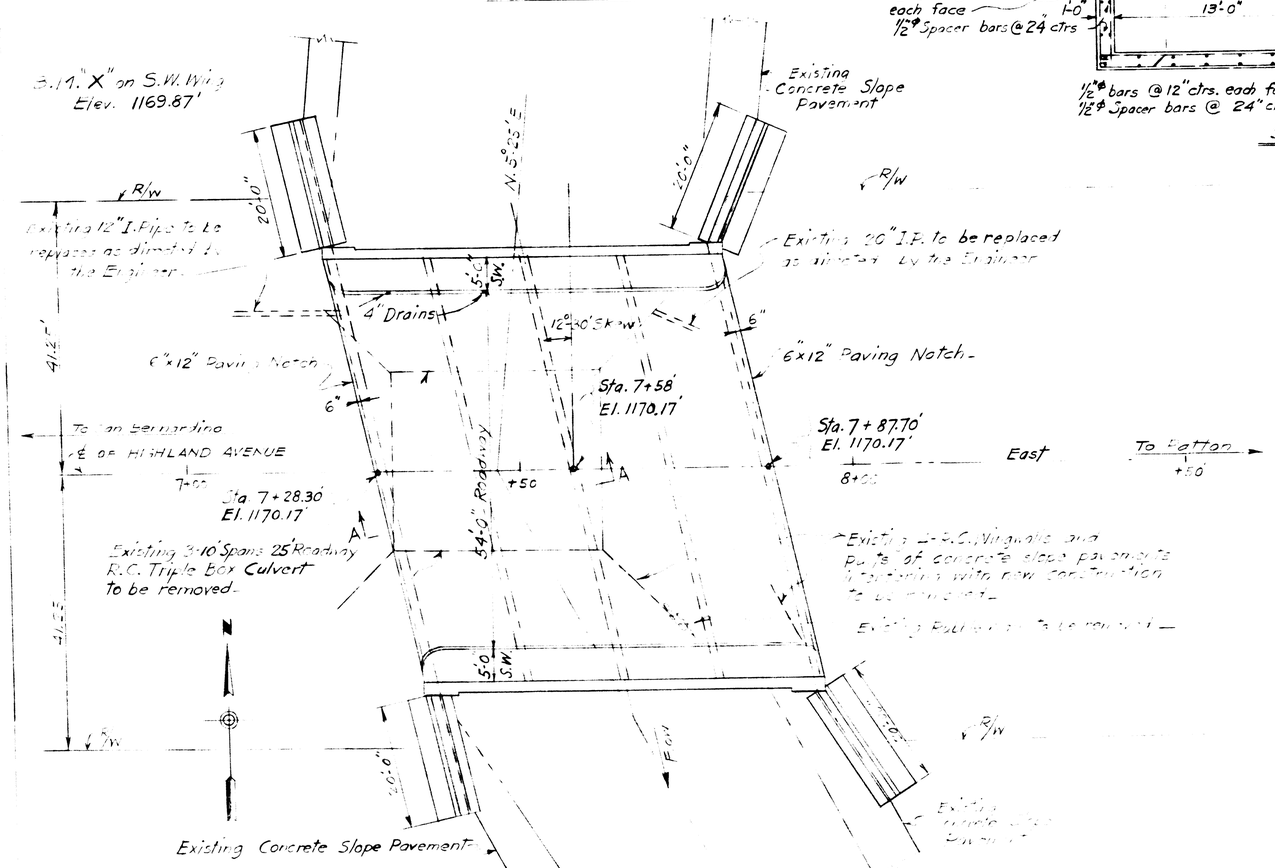

PLAN
Scale:— 1" = 10'

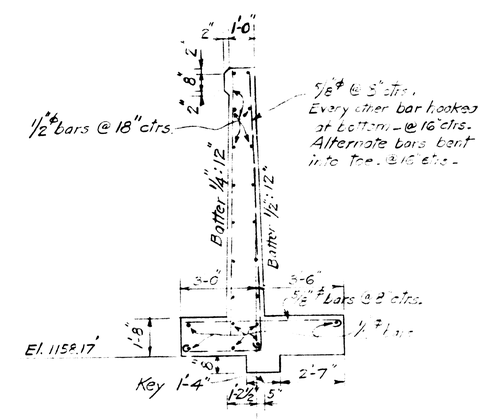

SECTION ON WING-WALL
Scale:— 3/8"=1'-0"

PLAN
OF
CULVERT ACROSS EAST TWIN CREEK
ON HIGHLAND AVENUE IN SAN BERNARDINO
IN SAN BERNARDINO COUNTY

APRIL-1937

CHARLES L. F[illegible]KE
CITY EN[illegible]EER.